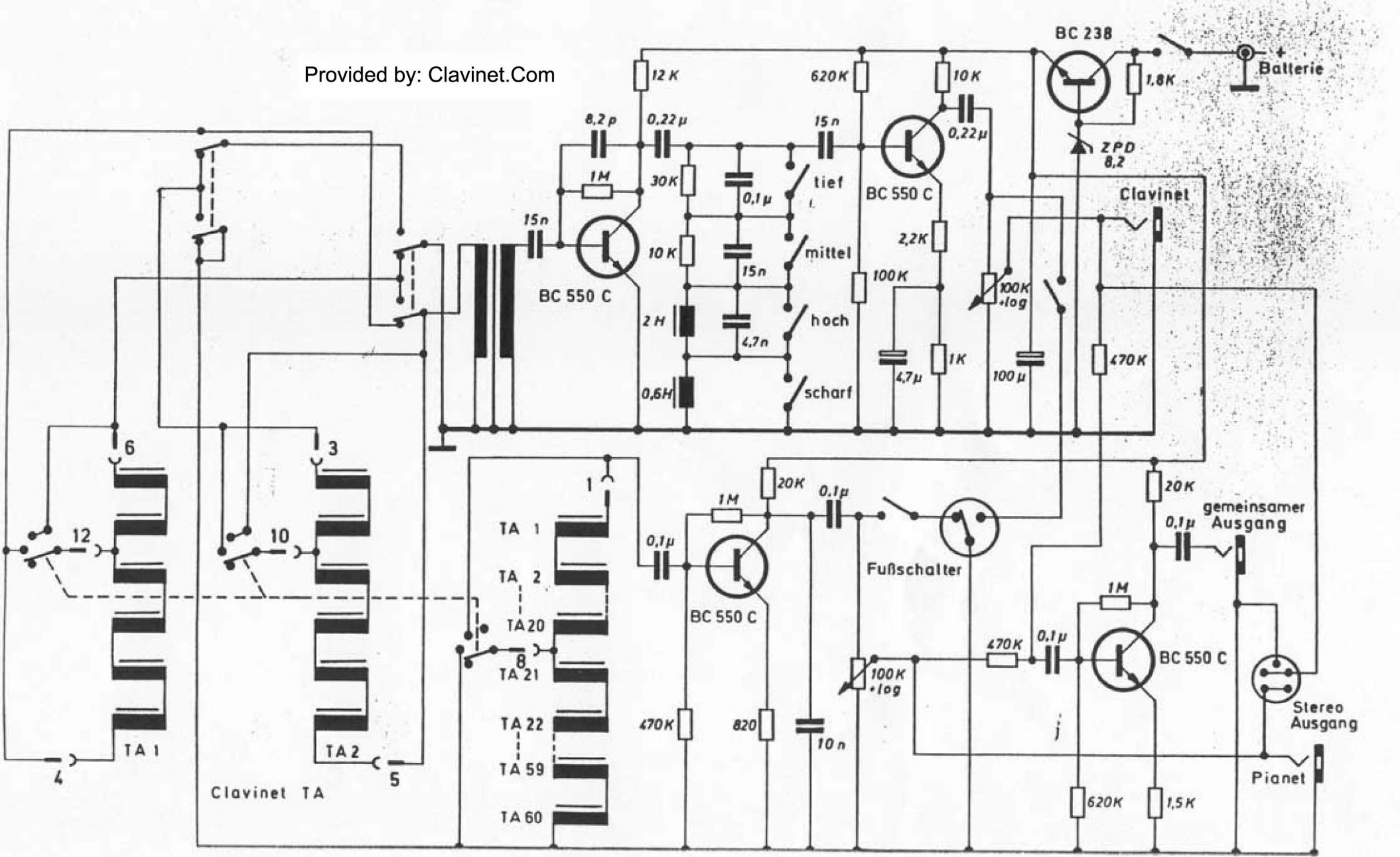Provided by: Clavinet.Com